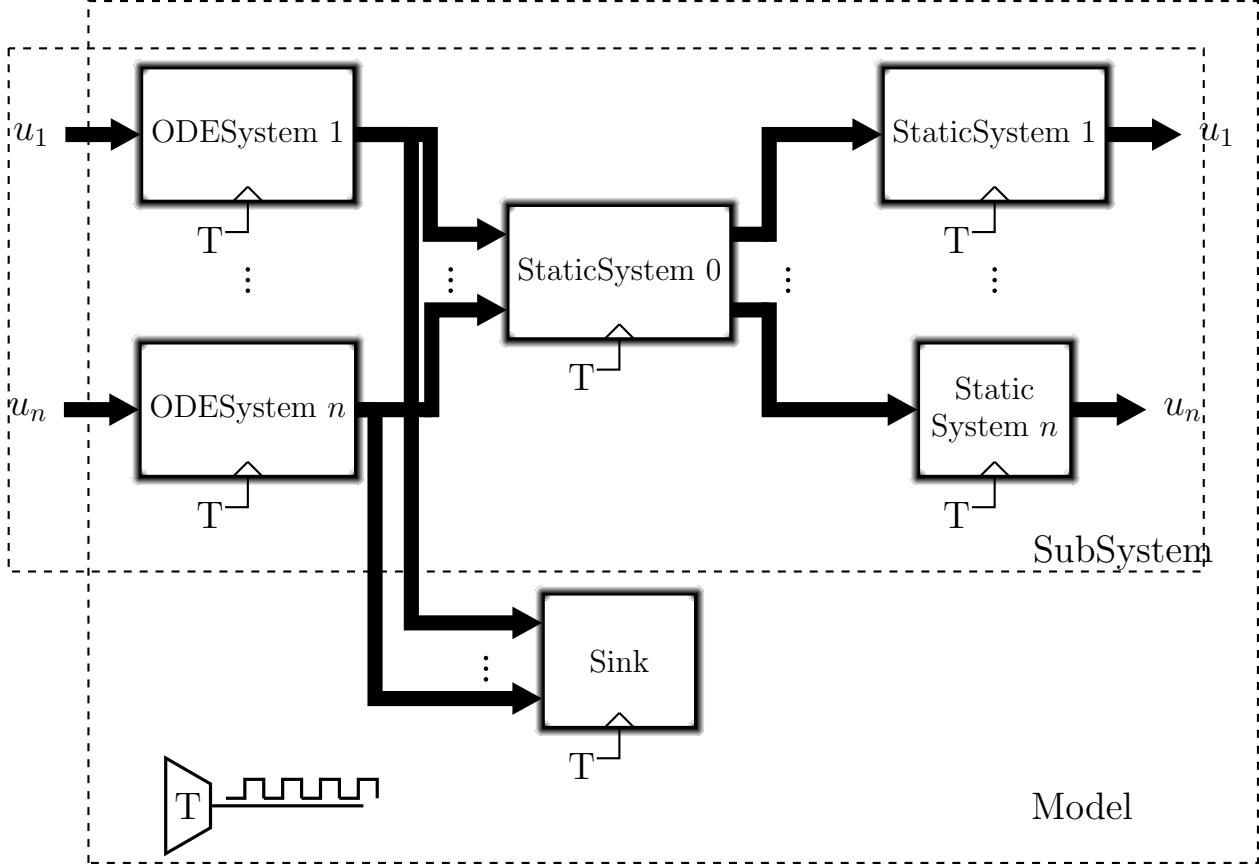
u_1
ODESystem 1
T
u_n
ODESystem n
T
StaticSystem 0
T
StaticSystem 1
T
u_1
Static System n
T
u_n
SubSystem
Sink
T
T
Model